

User Manual

WildBar 8

Document revision: 20261020-01

Fixture software version 0.4.1

GLP German Light Products

Document revisions

Revision number	Notes	Date released
20261020-01 (Rev A)		November 2026

GLP WildBar 8 User Manual

© 2026 German Light Products GmbH. All rights reserved.

The marks ‘GLP’ and ‘German Light Products’ are trademarks registered as the property of German Light Products GmbH in Germany, in the United States of America and in other countries.

The information contained in this document is subject to change without notice. German Light Products GmbH and all affiliated companies disclaim liability for any injury, damage, direct or indirect loss, consequential or economic loss or any other loss occasioned by the use of, inability to use or reliance on the information contained in this document.

Manufacturer’s head office

GLP German Light Products GmbH, Industriestrasse 2, 76307 Karlsbad, Germany
Tel (Germany): +49 7248 92719-0

Service & Support EMEA

GLP, Industriestrasse 2, 76307 Karlsbad, Germany
Tel: +49 7248 9271955 | support@glp.de | www.glp.de

Service & Support USA

GLP USA
Tel: +1 818 767 8899 | info@germanlightproducts.com
www.germanlightproducts.com

Service & Support UK Ltd.

GLP UK
Tel: +44 1392 690140 | uk@glp.de
www.glp.de

Table of Contents

Safety **6**

Key to symbols 6

General safety information 6

Electrical safety 7

Fire safety and protection from burns 7

Eye safety 8

Strobe safety 8

Installation safety and protection from personal injury 8

Avoiding damage to the fixture **9**

General precautions 9

Avoiding damage from light sources 9

Avoiding damage from dust and airborne particles 9

Transportation and storage 10

WildBar 8 overview **11**

Preparation for use **13**

Included items 13

Additional accessory items 13

Lifting and carrying 13

Orientation and location 13

Identifying the front of the fixture 13

Mounting 14

Securing the fixture with a safety cable 15

Tilt Lock 16

Alignment Pins 16

Connections **17**

AC power 17

Connecting to control data 18

Features **19**

Light Source . . . 19
Control options . . . 19
Main and sub modules (main and sub fixtures) . . . 19
Powering on . . . 19
Dimmer . . . 20
Tilt . . . 20
Zoom . . . 20
Color mixing . . . 20
iQ.Gamut . . . 20
White point . . . 21
Tungsten effect . . . 21
Shutter . . . 21
Pattern engine . . . 21
Special/Control DMX channel . . . 22
Fan modes . . . 22
PWM frequency . . . 22
No signal . . . 23
Display mode . . . 23
User presets . . . 23

Control panel **24**
Default information screen . . . 24
Using the control panel . . . 25
Control button shortcuts . . . 26
Error messages . . . 26
Loss of DMX signal . . . 26

Control menu structure **27**
Quick menu . . . 27
Main menu . . . 27

Service and maintenance **30**
Cleaning . . . 30
Suggested maintenance intervals . . . 30
Main fuse . . . 31

Silica Gel Compartment 31

Technical specifications **32**

Light source 32

Optical system 32

Dynamic effects and movement 32

Control and programming 32

Connections 33

Electrical 33

Construction and installation 33

Thermal 33

Dimensions **34**

Fixture Dimensions 34

DRX Sleeve Dimensions 35

DRX Sleeve with Fixture 36

Safety

Key to symbols

The following symbols are used in the user documentation and on the product:

Symbol	Label	Meaning
	WARNING	Safety hazard. Risk of severe injury or death.
	WARNING – VOLTAGE	Hazardous voltage. Risk of lethal or severe electric shock.
	WARNING – FIRE	Fire hazard.
	WARNING – EYES	Risk of eye injury.
	WARNING – HOT SURFACE	Hot surface. Risk of burn injury.
	NOTE	See the user documentation for important safety information.

General safety information

Read this section and the safety instructions (packaged with the fixture) carefully before installing or using the product. If you have any doubts or questions about how to use the product safely, contact your GLP supplier for assistance.

The WildBar 8 and this user documentation are intended for use by experienced professionals with the knowledge and skills to set up, operate and maintain remotely controlled lighting equipment safely and efficiently.

- Respect all warnings and directions given in the fixture's user documentation and on the fixture.
- The manufacturer takes no responsibility for damage or harm resulting from disregard of this information.
- Check www.glp.de for the latest version of this manual, and check that the firmware version stated on page 2 matches the version installed in the product.
- Make all user documentation available to everyone who will install, operate or service the fixture, and keep it for future reference.

- Use the product only as directed in this manual. Refer any service operation not described here, and all repairs, to a technician authorized by GLP.
- The light source in this product must not be changed.
- Read and follow the user documentation for all additional equipment.

Electrical safety

- Do not allow the product to come into contact with water or moisture.
- Use only an AC mains supply that complies with local building and electrical codes and has both overload and ground-fault (earth-fault) protection.
- Ensure that the product is electrically connected to ground (earth).
- Disconnect the product from AC mains power before any installation or maintenance work and when it is not in use.
- powerCON connectors are not suitable for hot-plugging. Locate power outlets or switches near the product so it can be disconnected easily.
- Disconnect the product from power immediately if the power plug or any seal, cover, cable or other component is damaged, defective, deformed, wet or shows signs of overheating. Do not reapply power until the product has been repaired by a technician authorized by GLP.
- Before use, check that all power distribution equipment and cables are in perfect condition and rated for the electrical requirements of all connected devices.
- If a fuse blows, replace it only with one of the original type and rating (**TBC**). If new fuses blow, disconnect the product and send it to an authorized technician.
- Do not connect devices to power in a chain if the total maximum current draw of all devices, added together, exceeds the current rating of any cable or connector in the chain. The supplied power cable is rated 16 A. The maximum number of WildBar 8 fixtures in one chain is **TBC** (with a power consumption of 350 W per fixture, 4 fixtures at 100–120 V and 8 fixtures at 200–240 V are expected; the WildBar 16 with 700 W is limited to 2 and 4).

Fire safety and protection from burns

- Do not operate the product if the ambient temperature exceeds 45 °C (113 °F).
- The surface of the casing can become hot during operation. Avoid contact by persons and materials, and allow the product to cool before handling.
- Keep all combustible materials (for example fabric, wood, paper) at least 0.2 m (8 in.) away from the product.
- Ensure free and unobstructed airflow around the product and its air vents.
- Do not illuminate surfaces closer than 1 m (3.3 ft) to the product.
- Do not stick filters, masks or other materials onto optical components.
- The optical components can focus the sun's rays, creating a risk of fire and damage. Do not expose the front of the product to sunlight or any other intense light source, even from an angle.

Eye safety

WARNING – EYES The WildBar 8 is classified as Risk Group 2 at a distance of 1 m (3.3 ft) according to EN 62471. Possibly hazardous radiation is emitted.

- Do not stare into the light output. It may be harmful to the eyes.
- Do not look at the light output with optical instruments or any device that may concentrate it.
- Make sure persons working on or near the product are not looking directly into the light output when it lights up suddenly, for example when power is applied, when a DMX signal is received or when certain menu items are selected.
- Provide well-lit conditions to reduce the pupil diameter of anyone working on or near the product.

Strobe safety

- Flashing light, particularly at 5–30 Hz, may cause seizures in persons with photosensitive epilepsy. Do not use strobe effects for extended periods.
- Comply with local regulations on the use of strobe lighting and warn the public in advance with highly visible signs.
- If a seizure occurs, stop using strobe effects and seek professional medical help. Call emergency services if the seizure lasts more than five minutes, if it is the person's first seizure, or if the person is injured.

Installation safety and protection from personal injury

- Installation must be performed by qualified personnel only and in accordance with applicable local regulations (such as DIN VDE 0711-217).
- Ensure that the supporting structure and installation hardware can hold at least 10 times the weight of the load they support.
- Suspend the product with hardware specifically designed and rated for the purpose, in perfect condition. Fasteners must be steel grade 8.8 or better. Rigging clamps must be half-coupler type that completely encircle the truss chord.
- If the product is installed where it may cause injury or damage if it falls, install a safety cable or similar secondary attachment that will hold the product if the primary attachment fails. It must be approved for the weight it secures, comply with EN 60598-2-17 Section 17.6.6 and support a static load of ten times that weight. Never use safety cables as the primary means of support.
- Before applying power, ensure that the head can tilt through its full range without risk of collision. Allow at least the minimum center-to-center distance between fixtures given in the technical specifications.
- Check that all covers and rigging hardware are secure. Do not operate the product with missing or damaged covers, shields or optical components.
- Restrict access below the work area and work from a stable platform whenever installing, servicing or moving the product.
- If the product becomes damaged, stop using it immediately and disconnect it from power.
- Do not modify the product in any way not described in this manual. Install genuine GLP parts only.

Avoiding damage to the fixture

General precautions

- Use only original spare parts. Any structural modification of the fixture voids the product warranty.
- Inspect the fixture regularly and clean it only as directed in this manual. Oils, solvents and other chemicals can damage lens coatings and surfaces.
- Do not drop the fixture or expose it to mechanical stress or to heat from other fixtures.
- Do not pick up or carry the fixture by the front lens or by the LCD display. Damage caused this way is not covered by the warranty.

Avoiding damage from light sources

Do not point the front of the fixture towards the sun or other strong light sources. The front lens focuses and concentrates light like a magnifying glass. Strong light can cause internal damage, melt components or start an internal fire within seconds, whether the fixture is powered on or off. Damage can also occur if the light hits the front of the fixture at an angle.



Avoiding damage from light sources: the lens can focus sunlight (left, middle); keep the front shielded or pointed away (right).

- Do not expose the front of the fixture to sunlight or any other strong light source.
- In daylight applications, shield the front of the fixture or point it away from the sun, even when not in use.
- Avoid pointing other high-powered lights directly at the fixture.

Avoiding damage from dust and airborne particles

Dust, smoke fluid residue and other airborne particles reduce light output and can damage the fixture. Keep the fixture and its air vents clean (see Service and maintenance). The permitted environment is dry, indoor, with an ambient temperature of 5°C to 45°C.

Transportation and storage

Transport the fixture in a flightcase or in its original packaging (DRX sleeve) to protect it from shocks. Store the fixture in a dry location when not in use.

WildBar 8 overview

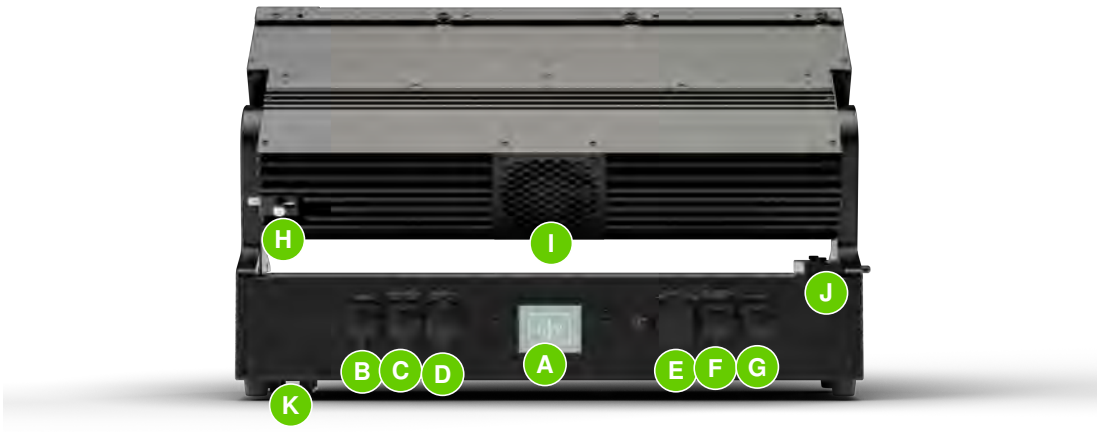

Overview

Item	Description
A	**Display**
B	**DMX In**
C	**Network In**
D	**Power In**
E	**Power Out**
F	**Network Out**
G	**DMX Out**
H	**Tilt Lock**

Item	Description
I	**Ventilation Opening**
J	**Alignment Pins**
K	**Safety Eyelet**

Preparation for use

WARNING Read the Safety chapter and safety instructions (packaged with the fixture) before you install or operate the fixture.

Included items

A single fixture is packed in a cardboard box or DRX sleeve. Other supplied items:

- Power cable
- Omega bracket
- Safety instructions

Additional accessory items

A filter frame holder for the fixture is available as an optional accessory.

Lifting and carrying

The fixture weighs 13.5 kg. Lift it by the base. Do not lift or carry it by the head or the yoke.

Orientation and location

- The fixture may be used in any orientation.
- Use in temporary outdoor locations only. Ambient temperature range: 5°C to 45°C (40°F to 113°F).
- Keep the fixture at least 0.1 m from combustible materials and at least 1.0 m from illuminated surfaces.
- Make sure the head cannot collide with anything when it tilts.

Identifying the front of the fixture

The display and connectors identify the back of the fixture. A silkscreen printed arrow at the bottom of the fixture also identifies the front.



Arrow indicating the front of the fixture on the bottom.

Mounting

The fixture is attached with two pair of $\frac{1}{4}$-turn locks in the base.

1. Attach two rated mounting clamps or adapter to the omega bracket and fasten it securely to the support.
2. Attach a safety cable as described below.
3. Check that the head is unlocked and can move freely through its full range.

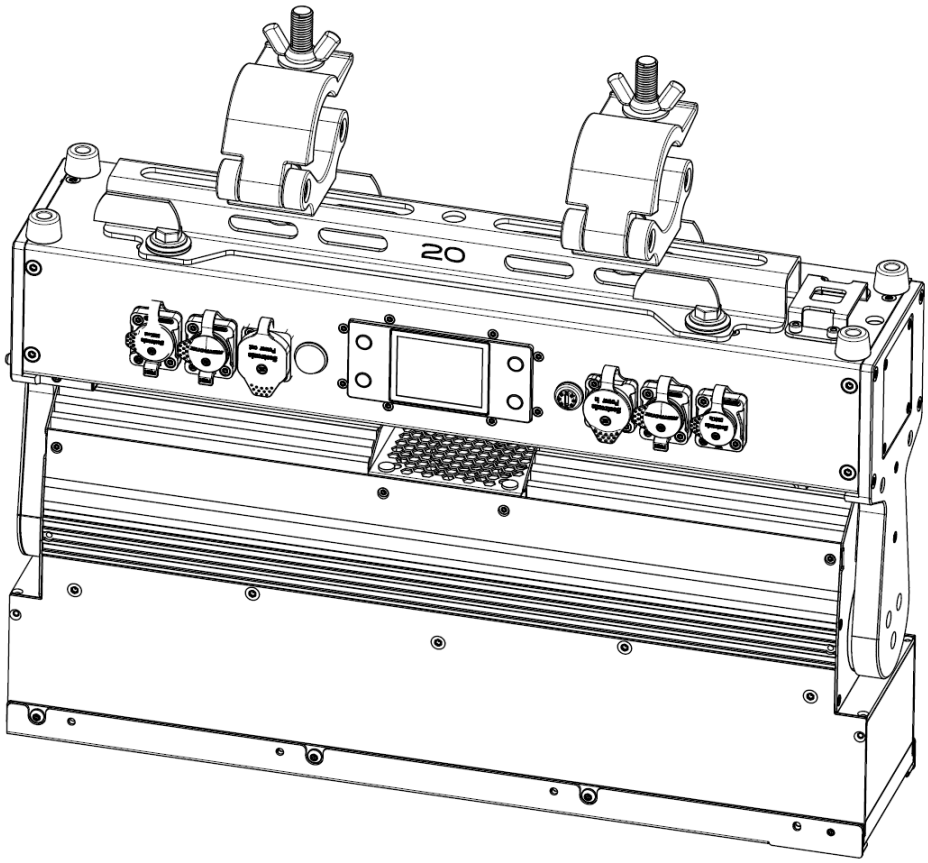

Fixture with omega bracket and two clamps

Securing the fixture with a safety cable

Attach a safety cable to one of the two eyelets and loop it around the truss or support so it holds the fixture if the primary attachment fails. Take up as much slack as possible, for example by looping the cable more than once around the truss. The cable must meet the requirements in the Installation safety section.

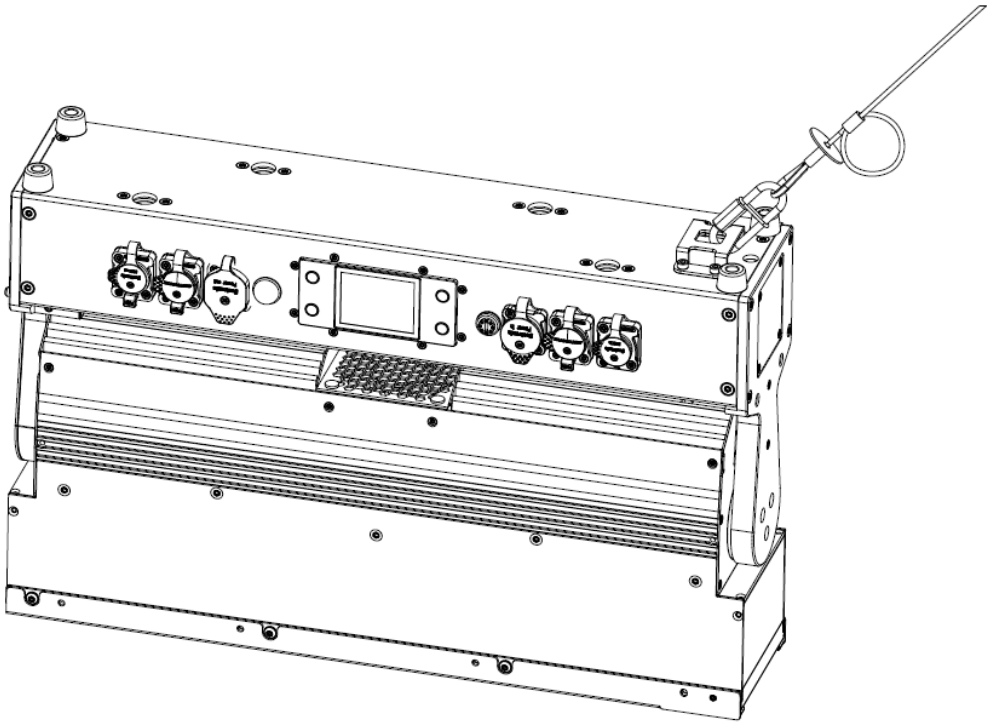

Safety cable attachment

Tilt Lock

The fixtures head can be mechanically mounted in the upright by the tilt lock. For this point the head straight upwards and slide the tilt lock out.

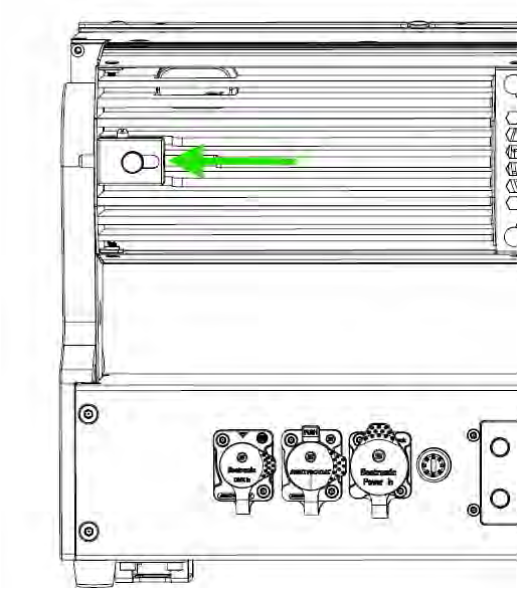

Tilt Lock slider

Alignment Pins

The fixture has slide out alignment pins on one side.

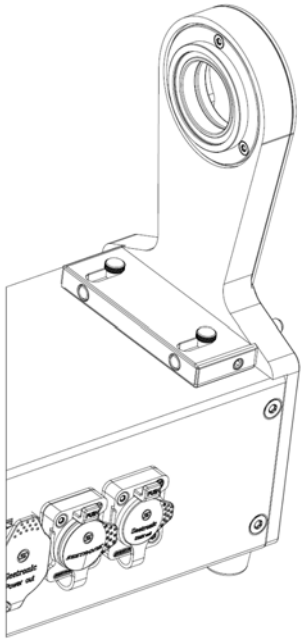

Slide out alignment pins

Connections

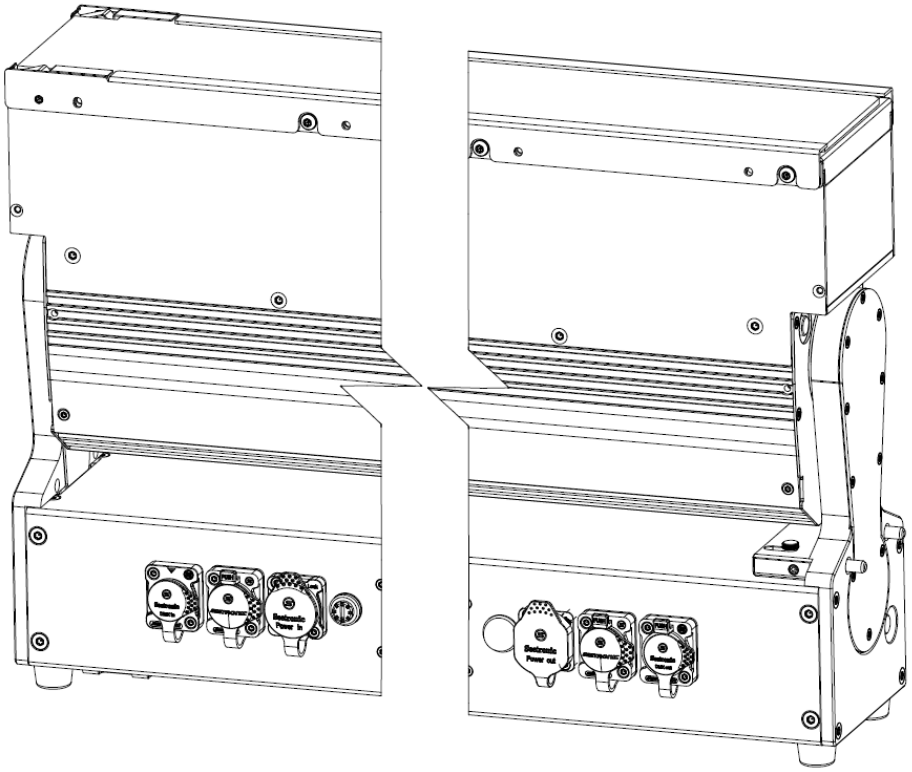

Connector panel: mains In/Out and DMX In/Out

AC power

The fixture has an auto-ranging switch-mode power supply for 100–240 V AC, 50/60 Hz, and draws a maximum of 200 W at 230 V. The mains supply must include a protective earth connection and be protected against earth leakage and overload. Do not connect the fixture to an external dimmer.

Mains connections are Neutrik powerCON TRUE1 In and Out. Shut down power to the cable before connecting or disconnecting it. TRUE1 connectors are not designed for hot-plugging or for switching under load. The fixture has no power switch.

1. Check that power to the supply cable is off.
2. Insert the powerCON TRUE1 cable connector into the Mains In socket and twist to lock.
3. Before applying power, check that the head is free to move and that nobody is looking into the front of the fixture.

The Mains Out socket passes through the supply voltage from Mains In. Add together the maximum current draw of all devices in a chain and make sure it does not exceed the rating of any cable or connector. The maximum number of fixtures per chain is 8 on 110V and 18 on 230V.

Connecting to control data

The fixture provides 5-pin XLR In and Out sockets for a DMX512 data link:

Pin	Signal
1	Ground / shield
2	Data − (cold)
3	Data + (hot)
4, 5	Not used

Use cable suitable for DMX data and terminate the last device on the link. The fixture also supports RDM (ANSI/ESTA E1.20) and GLP iQ.Mesh.

Features

Light Source

It is equipped with eight 40 W RGBL LEDs that deliver up to 4,500 lumens.

Control options

The WildBar 8 supports DMX, RDM, Art-Net, sACN and the GLP iQ.Mesh system. Three control modes are available (the mode structure of the WildBar 16, with 8 instead of 16 pixels):

Mode	Name	Channels	Description
M1	Basic	28	Overall control of all pixels as one block, with the pattern engine.
M2	Pixel (default)	55	As M1, plus individual RGB control of each of the 8 pixels (3 pixel mapper channels + 8 × 3).
M3	RGBL Pixel	63	As M1, plus individual RGBL control of each of the 8 pixels (3 pixel mapper channels + 8 × 4).

Main and sub modules (main and sub fixtures)

The control modes with pixel control divide the fixture into two modules: the main module (layer 1: one RGB(L) wash fixture) and the sub module (layer 2: pattern engine with individual pixel control). The sub module has its own intensity and shutter channels. Professional controllers handle this setup in a smart multi-fixture profile.

The settings Protocol Setup > Pattern > Main Link and Protocol Setup > Separate Patch Pixel Engine > Main Link decide whether the sub module is subordinate to or independent of the main module, for the pattern engine and the pixel engine respectively:

- **Normal:** all sub module channels are subordinate to the main fixture channels. The intensity and shutter of the main module act as master intensity and master shutter for the sub modules.
- **Independent:** the sub modules can be controlled independently of the main module and are not affected by its intensity and shutter.

Powering on

When power is applied and no valid DMX signal is present, the head moves automatically to its home position (tilt center). The setting Fixture Settings > No Signal selects what the fixture does when there is no control signal.

Dimmer

The electronic dimming gives smooth 16-bit dimming of the main module and the sub modules. Three dimming curves are available:

- **Linear** gives a curve that the eye perceives as linear.
- **Square (Soft)** gives finer control at low light levels, where the eye is most sensitive to changes, and coarser control at high levels.
- **S-Curve** gives finer control at low and at high light levels and coarser control at medium levels.

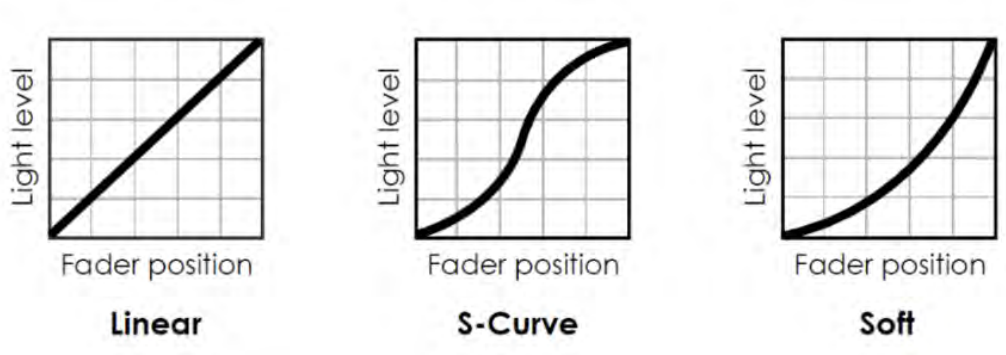

Dimming curves: Linear, S-Curve and Soft

Tilt

The WildBar 8 has a motorized tilt of 200° with coarse and fine control channels (16 bit). With the fixture standing on the ground, increasing the tilt DMX value moves the head towards the front from its home position.

Zoom

The WildBar 8 has a motorized zoom from 4° (parallel curtain beam) to 44° (uniform wash). The beam angle increases from spot to flood as the DMX value increases.

Color mixing

The main module has 16-bit color mixing with RGB or RGBL control, selected with Fixture Settings > Color Mix Mode. The color mix mode of the sub modules is always RGB.

- **RGB mode** mixes the color of the main and sub modules with the Red, Green and Blue channels. The Lime LED is mixed automatically by the internal GLP iQ.Gamut algorithm.
- **RGBL mode** mixes the color of the main module with the Red, Green, Blue and Lime channels.

iQ.Gamut

iQ.Gamut is a GLP LED calibration technology that defines the color gamut for the color mix channels. You can select one of a range of calibrated gamuts for the fixture to work within, which is useful to reproduce correct colors or to avoid TV camera clipping. Set it with Fixture Settings > iQ.Gamut: FULL (maximum

gamut), Rec.709, Rec.2020 (and DCI P3.65 as for the WildBar 16, **TBC**).

White point

The white point is the output color when all color control channels are at 100 %. You can set it to a color temperature with Fixture Settings > White Point: 8000 K, 6500 K (default), 5600 K, 4200 K or 3200 K (RGB color mix mode only).

Tungsten effect

This control channel lets you select tungsten lamp simulations. The first part of the channel offers standard tungsten features with fixed color temperature, red shift and fade time; the color temperature as well as the color shift and the inertia of the selected light source are fully simulated. The second part lets you apply the corresponding tungsten effect (inertia and intensity) to the current output. The tungsten channel affects the whole fixture, main and sub modules.

Shutter

The shutter channel offers continuous blackout, continuous open and a range of intensity effects (3 to 24 Hz). Depending on the sub module mode, the shutter channel of the main module is a master shutter or the shutter of the main module alone.

- **Single flash:** one single flash for each value change inside this DMX value slot.
- **Pulse:** dims up and down smoothly with equal fade-in and fade-out times; the speed can be adjusted from slow to fast.
- **Pulse open:** fades in and then snaps to blackout. **Pulse close:** fades out and then snaps to full.
- **Strobe double flash:** a quick double flash.
- **Strobe pixel random** (only in modes with individual pixel control) strobes individual pixels at random, which gives a sparkling effect.
- **Strobe random** strobes all pixels of one fixture together at random intervals; the random effect across several fixtures is really random.
- **Strobe** strobes all pixels of a fixture together and synchronizes the strobe perfectly across several fixtures.

If the Main Link setting is Normal, the dimmer and shutter of the main module act as master controls for the sub fixtures.

Pattern engine

The WildBar 8 offers a range of static and dynamic pre-programmed FX patterns on the sub modules. The color control channels of the sub module define the color of the pattern effects. A static pattern has only one pattern step; a dynamic pattern is a sequence of several pattern steps, which change automatically (pattern speed) or can be selected directly (pattern index). Each active pixel shows the selected pattern color; each inactive pixel is fully transparent.

The pattern select channel offers static patterns, dynamic patterns and special patterns. Pattern 0 (DMX 000) is the idle pattern and sets all pixels to active. The Random Pixel FX pattern at the end of the channel selects

pixels at random for a sparkle effect. The pattern list of the WildBar 16 was designed for 16 pixels; the pattern list and the number of patterns for 8 pixels are **TBC**.

Pattern speed and index

For a dynamic pattern you can select an automatic clockwise or counter-clockwise run through the steps at different speeds (DMX 002 to 127) or one specific pattern step (static indexing, DMX 128 to 255). Different patterns can have different numbers of steps, which can affect the synchronization between fixtures that run different patterns.

Pattern step crossfading

The pattern step crossfading channel sets how one step changes into the next: a snap, a normal crossfade or a fade with tail (quick fade in and variable long fade out).

Pattern transition

The pattern transition channel sets how pattern A changes into pattern B: a snap, a soft crossfade, a fade over blackout (FOB) or a fade over full (FOF).

Special/Control DMX channel

The Special/Control DMX channel lets you change fixture settings and reset the fixture from the control desk, which can be useful during a show or for a specific scene. To apply a command you must hold it for the time stated in the DMX Channel Index (3 seconds). To trigger an additional reset you must first leave the reset DMX value and then return to it; this prevents the fixture from entering a reset loop if it is patched wrongly. Most settings in the control menus or on the Special/Control channel are also available via RDM.

Fan modes

The fan modes let you give priority to the lowest fan noise or to the most powerful cooling. In all modes the light intensity is reduced if the fixture becomes too hot, and the light output is shut down if a dangerous temperature is reached.

- **Regulated:** priority to light output; fans run only as necessary.
- **High:** maximum light output for operation in high ambient temperatures; fans run constantly at high speed.
- **Medium:** fans run constantly at medium speed; light output is slightly reduced.
- **Low:** fans run constantly at low speed for minimum noise; light output is reduced.
- **Off** / **Minimum** (as on the WildBar 16, **TBC**): all fans that are not essential are disabled; essential fans rotate as slowly as possible; light output is reduced.

PWM frequency

You can select different LED PWM frequencies to avoid flicker on cameras (Low, Optimal, High 1, High 2, Max). Higher PWM frequencies reduce the dimming resolution.

No signal

This setting defines how the fixture behaves when no DMX signal is present:

- **Blackout:** the fixture blacks out whenever it receives no DMX signal.
- **Hold:** the fixture continues to use the last DMX values it received.
- **House light:** the fixture runs at 80 % output, useful for rigging or the end of a show.
- **Scene:** the fixture plays its stored stand-alone scene, so that it can operate by itself at power-on. Store the scene with Capture DMX Values, or set Manual DMX values from the menu and store those.

Display mode

The display mode gives different behaviors of the display in the control panel, which can help in case of errors or during service work.

- **Auto** (default): the display switches off after a few seconds if the fixture receives a valid control signal and has detected no error. Without a valid signal the display flashes; with an error it stays on and shows the error.
- **On:** the display stays on constantly (useful for configuration or service).
- **Off:** the display switches off after a few seconds even without a valid signal or with an error; pressing any button turns it on again.

User presets

You can store and reload up to three custom fixture configurations or return the fixture to its default settings. Save the current settings with Service > Advanced > Save Settings, reload a preset with Fixture Settings > Load User Settings, and return to the defaults with Fixture Settings > Setting Defaults. User presets do not affect the DMX address, control mode, protocol type, IP settings and similar settings, so that communication with the controller is not lost.

Control panel

WARNING DMX control is disabled when the control menus are active. Be prepared for the head to move as soon as you exit the control menus.

The control panel and the backlit graphic LCD display allow you to change fixture settings, view readouts and use utilities quickly and intuitively, even when the fixture is disconnected from power (the display has a self-charging battery). To allow comfortable use of the control panel, tilt is disabled automatically for a few seconds when you press any button, and stays disabled as long as you work in the control panel. If no button is pressed for a few seconds, head movement is enabled again with tilt correction applied.



Control panel and display (placeholder)

Default information screen

When power is applied, the fixture performs a reset. After the reset the default information screen appears on the display. At any other time you can press any button to unlock the control panel, which also calls up the default information screen.

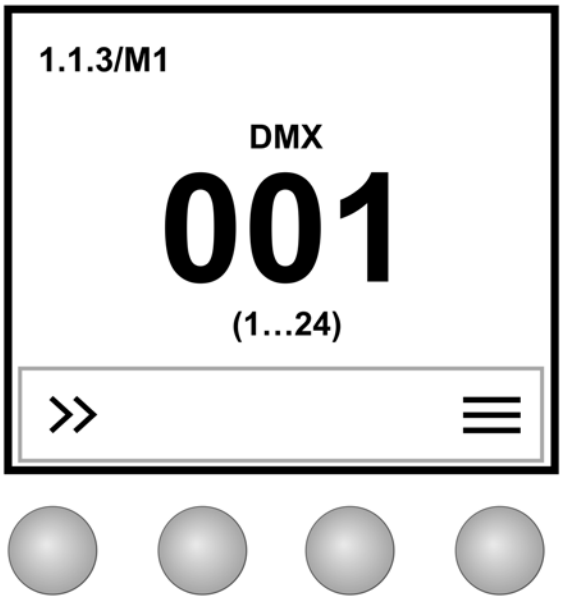

Default information screen (placeholder)

The top line of the default information screen shows, from left to right, the main CPU firmware version and the DMX mode. The center of the screen shows:

- the signal source;
- the fixture's current DMX address in large characters. If the self-diagnosis detects an error, the fixture alternates an error message with the DMX address, so that you can read both from a distance;
- a network icon to the left or right of the DMX address if the fixture detects an active network at one of the etherCON ports (icon on the left: data at port A, on the left of the fixture when facing the control panel; icon on the right: port B). The network speed is shown below the icon. If there is no network at a port, NO LINK is shown for that port;
- below the DMX address, in smaller characters, the DMX channels that the fixture currently uses.

Using the control panel

The four buttons around the display have the functions shown by the icons next to them. In the main screen:

- **QUICK MENU:** opens the Quick menu.
- **UP** / **DOWN:** press three times to open the live diagnostics.
- **MENU:** activates the control panel if it is in sleep mode, then opens the main menu.

While you navigate in the menus:

- **BACK:** goes back one level towards the top of the menu.
- **UP:** scrolls up or increases a number. **DOWN:** scrolls down or decreases a number.
- **ENTER:** confirms a setting or carries out a command.

At any time, pressing UP and DOWN together rotates the display temporarily by 180°.

Control button shortcuts

Live diagnostics

Pressing UP or DOWN three times opens an overview of all main fixture information, signal quality and settings. It helps with troubleshooting and when you are in contact with GLP Service.

Toggle display orientation

Pressing and releasing UP and DOWN together rotates the display through 180°. If Display Orientation is set to Auto, this changes the orientation only until the next power cycle. To change it permanently, use Fixture Settings > Display Orientation.

Error messages

If the fixture detects an error, it shows an error message on the display. The error is “sticky”: it stays on the display until the next power cycle or reset. The display offers a button to ignore the message and exit the error display, and a button to show information about the error. Make a note of any error message: you may need these details for the diagnosis and should give them to GLP Service. Certain critical errors are stored permanently in the display; in this case contact your GLP service agent.

When the fixture restarts or receives a RESET command, it runs an initialization that tests all functions and sensors, and it continuously checks itself during operation.

Loss of DMX signal

The display flashes if the DMX signal is lost. The fixture then behaves according to its No Signal setting (see the section No signal in the chapter Features).

Control menu structure

Quick menu

The Quick menu gives quick access to the most frequently used commands. To open it, press the left-hand button (QUICK MENU) while the display shows the default information screen.

Menu	Options	Function
Reset All	Confirm	Resets the entire fixture (takes a few seconds).
Live Diagnostic		Opens an overview of all main fixture information, signal quality and settings.
iQ.Service Connect	Connect	Enables connectivity to the GLP iQ.Service App for 5 minutes.
Load User Settings	User Setting 1, 2, 3 (Confirm); Setting Defaults (Confirm)	Loads custom user settings, or returns the fixture to the default settings (not including DMX address, protocol type, Ethernet / CRMX configuration, user offsets, user presets and counters).
Load Factory Defaults (!)	Confirm	Restores all factory default settings (including DMX address, protocol type, Ethernet configuration, user offsets and user presets). The fixture may lose contact with the controller.

Main menu

Menu	Options	Function
DMX Address	001 – 512	Sets the DMX start address. The highest possible address depends on the control mode.
Control Mode	M1 Basic (28 ch), M2 Pixel (55 ch), M3 RGBL Pixel (63 ch)	Sets the DMX control mode.
Protocol Setup > Data In	DMX, Art-Net, sACN, iQ.Mesh, CRMX	Selects the control protocol.
Protocol Setup > Data Out	Standard, DMX (XLR)	No incoming data is converted, or incoming data is output from the DMX XLR connectors.
Protocol Setup > Ethernet Config	Addressing mode: Auto 2.x.x.x, Auto 10.x.x.x, DHCP, Custom IP; custom IP address and subnet; Art-Net port; sACN universe	Network settings.
Protocol Setup > Linking Options	Link, Unlink	iQ.Mesh linking.
Protocol Setup > Pattern	Main Link: Normal, Independent	Pattern output depends on dimmer and shutter of the main fixture (Normal), or is not affected by them (Independent).
Protocol Setup > Separate Patch Pixel Engine	Off / On; Main Link: Normal, Independent; protocol; DMX address; Art-Net port; sACN universe	Only in the pixel modes: patches the pixels to another universe or source. Pixels are always RGB.
Fixture Settings > Color Mix Mode	RGB, RGBL	RGB: direct RGB control, Lime added automatically. RGBL: direct RGBL control.

Menu	Options	Function
Fixture Settings > White Point	8000 K, 6500 K, 5600 K, 4200 K, 3200 K	Sets the white point when RGB is at 100 % (RGB mode only).
Fixture Settings > iQ.Gamut	FULL, Rec.709, Rec.2020 (DCI P3.65, **TBC**)	Maximum gamut, or the color space defined as that gamut (RGB mode only).
Fixture Settings > Dimmer Curve	Linear, Soft, S-Curve	Selects the dimming curve.
Fixture Settings > Power Mode	Dynamic, Balanced	Power allocation
Fixture Settings > Fan Mode	Regulated, High, Medium, Low, Off	Regulated: fan speed temperature-regulated; High, Medium, Low: constant speed; Off: all fans off or at minimum speed.
Fixture Settings > PWM Frequency	Optimal (O), High 1 (H1), High 2 (H2), Max (M) (Low)	Optimum dynamic frequency, or fixed frequencies for camera work.
Fixture Settings > Pixel Mirror	Off, Mirrored	Normal pixel layout, or left-right flip.
Fixture Settings > No Signal	Blackout, Hold, Houselight, Scene; Capture DMX Values (Confirm)	Behavior without a DMX signal; Houselight = 80 %; Scene plays the captured scene.
Fixture Settings > Position Feedback	Off, On	Enables or disables the tilt position correction.
Fixture Settings > Display Mode	Auto, On, Off	Display behavior.
Fixture Settings > Display Orientation	Auto, Normal, Flip	Auto: the display inverts automatically to match the installation position.
Fixture Settings > Hibernation	On	Energy-saving mode: all electronics except the DMX receiver are disabled. Cycling power off and on exits hibernation.
Fixture Settings > Load User Settings	User Setting 1, 2, 3 (Confirm); Setting Defaults (Confirm)	Applies a user preset, or returns to the default settings.
Information	Live diagnostic, Show errorlist, Show serial number, Show SW version, Show device info, Show device hours, Device power cycles, Show DMX input, Show signal quality, Show temperature, Show fan monitor	Shows fixture information, stored errors and readouts.
Manual Control > Reset All	Confirm	Resets all effects.
Manual Control > Manual DMX	Tilt 001–128–255; intensity and further effects 000–255; Blue / Lime all pixels (Confirm); Load No-Signal scene; Save as No-Signal scene (Confirm 3 s); Reset Manual Values	Manually controls all effects. The fixture starts moving when you press Enter.
Service > Live Diagnostic, iQ.Service Connect	Connect	Overview of fixture information; enables the iQ.Service App connection.
Service > Tests	Test All, Test Fan	Runs a test sequence of all effects including tilt (stop with BACK); tests the fans one by one.
Service > Advanced (hold 3 s) > Service Mode	Off, On	Disables tilt and display timeouts; exit by cycling power.
Service > Advanced > Job Offsets	Tilt, Zoom	Custom offsets in the home positions (default 0). This is not a fixture calibration.

Menu	Options	Function
Service > Advanced > Reset Counters	Lamp hours, Service timer, Air filter (Confirm 2 s)	Resets the counters to zero.
Service > Advanced > Save Settings	User Setting Preset 1, 2, 3 (Confirm 2 s)	Saves the current fixture settings as a user preset.
Load Factory Defaults	Confirm	Reloads all factory defaults and the default configuration. The controller may lose the connection to the fixture.

Service and maintenance

WARNING Disconnect the fixture from power and allow it to cool before any service work. Work in well-lit conditions and do not look into the light output.

Cleaning

Dust, dirt and smoke fluid residue reduce light output and may damage the fixture. Pay special attention to the air vents and the front lens. Do not let optical parts come into contact with oil or grease, and do not touch them with bare fingers. Wait until all parts are dry before operating the fixture.

Suggested maintenance intervals

Intervals depend on the environment.

Task	Interval	How
Clean front lens	Weekly (adjust to environment)	Wipe with a soft cloth and glass cleaning fluid or water.
Clean fans and air channels	Monthly	Use a soft brush and vacuum cleaner. Hold fan blades still so they do not over-spin.
Replace silica gel	Quarterly (adjust to environment)	Open the silica gel compartment on the front of the fixture and replace with new dry silica gel.

Main fuse

The fuse type is T5A 250 V, 5×20 mm. Disconnect the fixture from power before replacing the fuse and replace it only with one of the same type and rating.

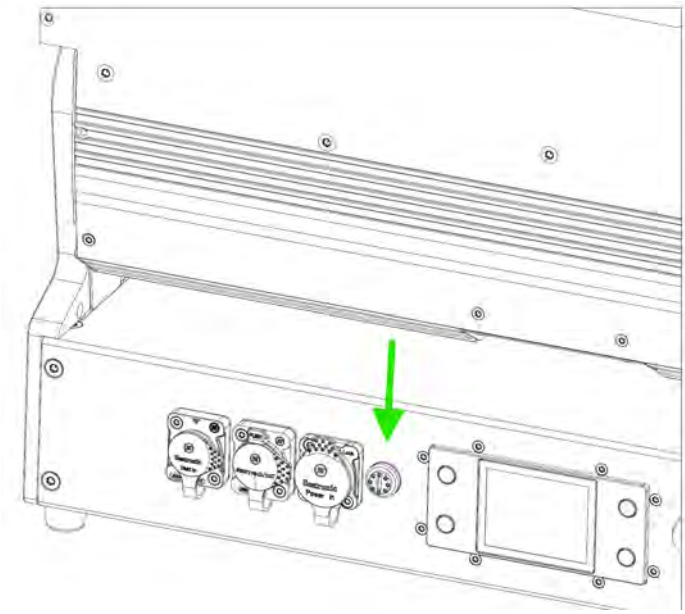

Main fuse location

Silica Gel Compartment

The front of the fixture has a silica gel compartment to keep the inside of the fixture dry.

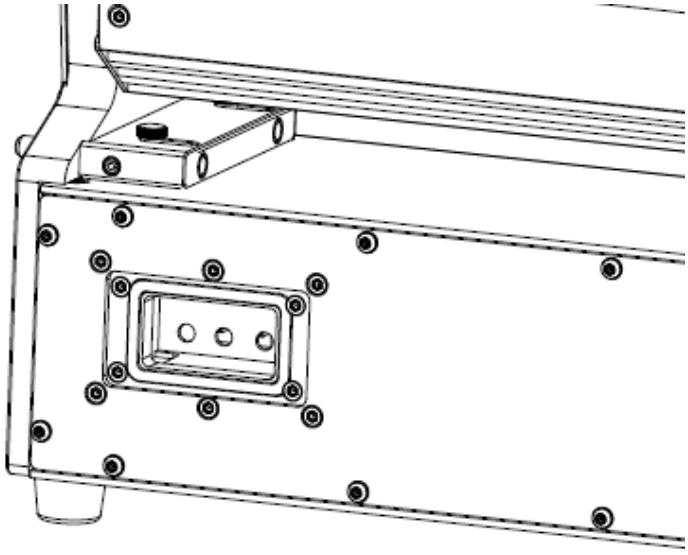

Silica Gel Compartment

Technical specifications

Light source

Type	8x RGBL
Power	8x 40 W
Count	8 LEDs
Lifetime	50,000 h

Optical system

Zoom angle	4° (min.) to 44° (max.)
Output lens	8x 48x48mm
Risk group (EN 62471)	Risk Group 2

Dynamic effects and movement

Dimmer resolution	16 bit
Dimming curves	Linear, Soft, S-Curve
Tilt	200°, 16 bit
Pattern FX	Pattern FX engine

Control and programming

DMX channels	20 | 30 | 42 | 54 | 173 | 429
Control modes	6
Protocols	DMX (USITT DMX512-A), RDM (ANSI/ESTA E1.20), GLP iQ.Mesh
High-res channels	Dimmer, Tilt
Performance modes	Fast, Normal (Balanced), Smooth
Fan modes	Regulated, High, Medium, Low
Setting and addressing	Backlit graphic LCD, 4-button menu, DMX, RDM, iQ.Mesh
Firmware update	iQ.Mesh, iQ.Tool or iQ.Control App

Connections

Power	Seetronic powerCON TRUE1, In / Out
Signal	Seetronic XLR 5-pin, In / Out
	Seetronic RJ-45, In / Out

Electrical

Power input	100–240 V AC, 50/60 Hz
Power supply	Auto-ranging electronic switch-mode
Max. power (@ 230 V)	340 W
Fuse	T5A 250 V, 5×20 mm

Construction and installation

Housing	Black; high-impact flame-retardant thermoplastic and aluminum
Protection rating	IP65
Mounting	2 pair of $\frac{1}{4}$-turn locks; 1 eyelet for safety cable
Orientation	Any
Location	Temporary outdoor

Thermal

Cooling	Combined convection and forced air; automatic overheating protection
Ambient temperature	5°C to 45°C (40°F to 113°F)
Min. distance to combustibles	0.1 m
Min. distance to illuminated surfaces	1.0 m

Dimensions

Fixture Dimensions

Height, head straight up	319 mm
Width across yoke	500 mm
Depth, head straight up	124 mm
Net weight	13.5 kg

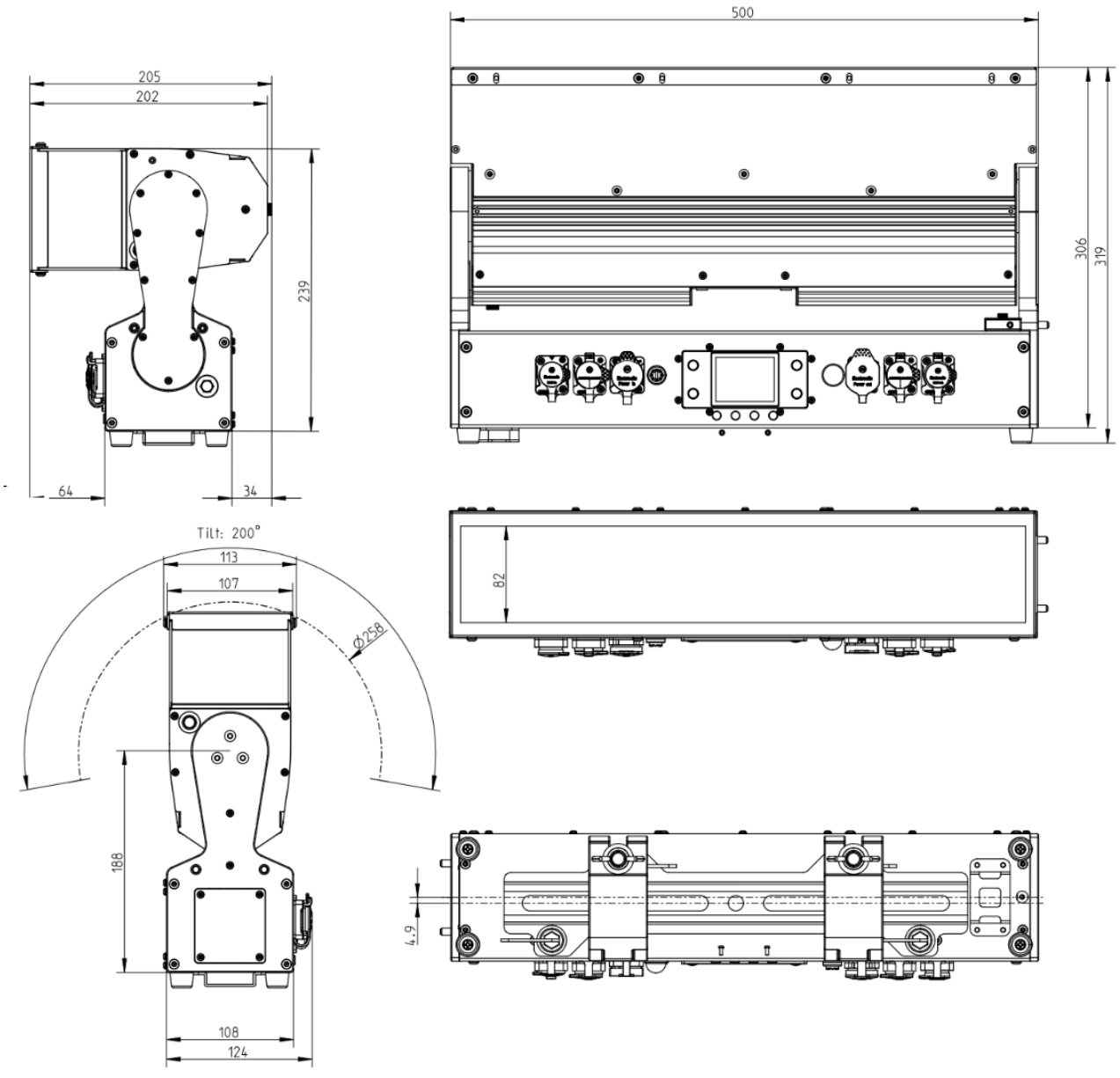

Dimensional drawing

DRX Sleeve Dimensions

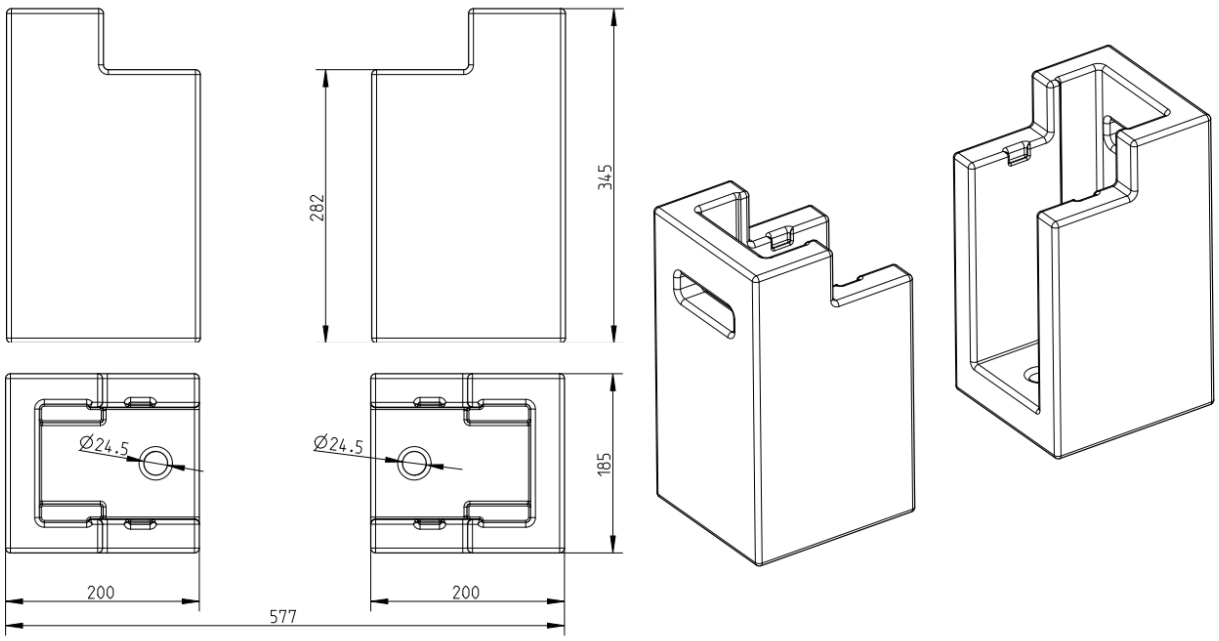

DRX Sleeve

DRX Sleeve with Fixture

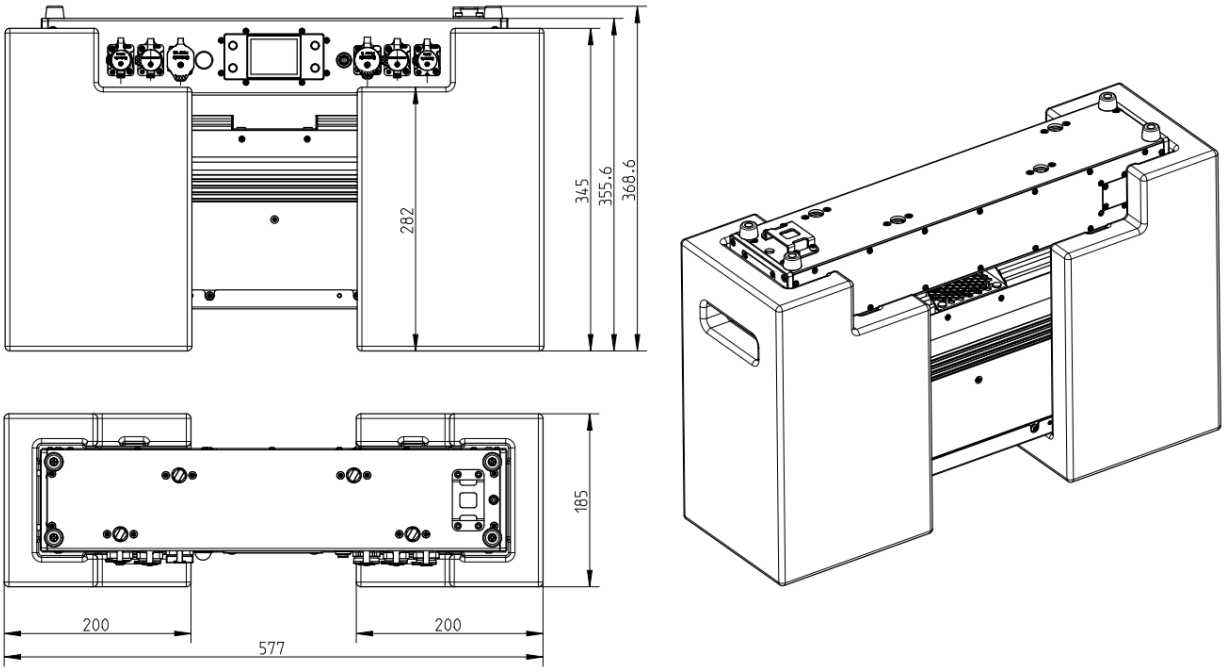

DRX Sleeve with fixture